AVIORACE SRL
via dell'Artigianato, 348 - 41058 Vignola (Mo) Italy
Tel. 0597700253 - Fax 0597520181
www.aviorace.it

IMU – Inertial Measurement Unit

Inertial measurement unit able to output ***accelerations and angular rates.***

Output is over can bus and it is possible to select multiple configurations through specific can messages/tool software working with PCAN-USB.

Technical Specification:

- Power Supply: 8÷16 Vdc
- Current Absorption: 20mA @ 12V
- Working Temperature Range: 0÷105 °C
- Thermal Effects: ±0.25% FS
- Material: Anodized aluminum
- Protection: IP64
- Weight with wires: ≈ 58 g
- Wires: Raychem 55A 26 AWG, length 1000mm
- Connection:

RED	Power Supply
BLACK	Gnd
WHITE	Can-H
BLUE	Can-L

Connector on request

Setting Configuration (default in bold):

- CAN ID: specifiche 2.0A
- BAUDRATE: **1 Mbps**, 500 Kbits, 250 Kbits
- ACCELEROMETER RANGE: ±24G, **±12G**, ±6G, ±3G
- GYROSCOPE RANGE: ±2000 °/s, ±1000 °/s, ±500 °/s, **±250 °/s**, ±125 °/s
- GIROSCOPE CUTT-OFF FREQ 3dB: 12 ; **32** Hz
- ACCELEROMETER CUT-OFF FREQ 3dB: 10; **19**; 40 Hz
- ZERO OFFSET: through a CAN message
- RELATIVE POSITION ON-VEHICLE: set through a CAN message

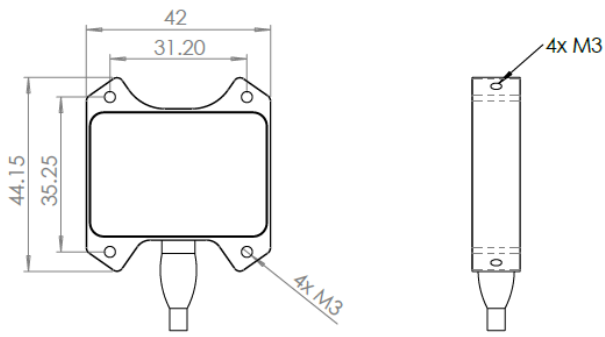

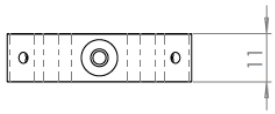

!!! Reserved CAN address used for internal and can settings: 0x0E5 !!!

Complete CAN protocol file is available, on request, in the user manual.

Quote in mm